B200 USER MANUAL
Class B AIS Transceiver

Thank you for purchasing this Class B AIS transceiver.

This product has been engineered to offer you the highest level of performance and durability and we hope that it will provide many years of reliable service. We constantly strive to achieve the highest possible quality standards, should you encounter any problems with this product, please contact your dealer or support@em-trak.com who will be pleased to offer any assistance you require.

Table of contents

1 Regulatory notices 3
1.1 Safety warnings 3
1.2 General notices 3
2 About your AIS transceiver 8
2.1 Overview 8
2.2 What's in the box? 10
2.3 Support and warranty 10
2.4 Configuration tool 11
3 Installation 12
3.1 Summary 12
3.2 Antennas 14
3.3 Power and Data 17
3.4 Location and fixing of the transceiver 20
3.5 Configuration 22
3.6 Introduction to proAIS2 23
3.7 Connectivity 27
4 Operation 31
4.1 Operating modes 31
4.2 LED indicators 32
4.3 Buttons 34
4.4 Silent mode 35
4.5 PGN table 37
5 Troubleshooting 39
6 Specifications 42
7 About AIS 44
7.1 Static and dynamic vessel data 45
8 List of abbreviations 47

List of figures and tables

Figure 1 AIS transceiver overview 8
Figure 2 Transceiver dimensions 9
Figure 3 Items included with the product 10
Figure 4 Typical installation configuration 12
Figure 5 Position of the VHF antenna connector 14
Figure 6 Grounding the AIS transceiver 15
Figure 7 Position of the GPS antenna connector 16
Figure 8 Power and data cable connections 17
Table 1 Colour coding of wires in the accessory cable 18
Figure 9 Connecting the power supply 19
Figure 10 AIS transceiver dimensions 21
Figure 11 AIS transceiver mounting 22
Figure 12 Configuration using your PC 23
Figure 13 Typical mobile devices for WiFi & Bluetooth connection 26
Figure 14 NMEA 2000 network connection 27
Figure 15 Connecting to your chartplotter 28
Figure 16 Connecting to your NMEA 0183 sensor 29
Figure 17 Connecting to your PC 30
Figure 18 LED indicator location on the AIS transceiver unit ... 32
Table 2 LED indicator functions 34
Figure 19 Connecting an external switch 36
Table 3 NMEA 2000 PGN List 38
Table 4 Troubleshooting 40
Table 5 Specifications 43
Figure 20 The AIS network 45

1 Regulatory notices

When reading this manual please pay attention to warnings marked with the warning triangle shown on the left. These are important messages for safety, installation and usage of the product.

1.1 Safety warnings

This equipment must be installed in accordance with the instructions provided in this manual.

This AIS transceiver is an aid to navigation and must not be relied upon to provide accurate navigation information. AIS is not a replacement for vigilant human lookouts and other navigation aids such as RADAR. The performance of the transceiver may be seriously impaired if not installed as instructed in the user manual, or due to other factors such as weather and or nearby transmitting devices. Compatibility with other systems may vary and is reliant on the third party systems recognising the standard outputs from the transceiver. The manufacturer reserves the right to update and change these specifications at any time and

Do not install this equipment in a flammable atmosphere such as in an engine room or near to fuel tanks.

1.2 General notices

1.2.1 Position source

All marine Automatic Identification System (AIS) transceivers utilise a satellite based location system, which is referred to as Global Navigation Satellite System (GNSS). This includes Global Positioning System (GPS), Globalnaya Navigazionnaya Sputnikovaya Sistema (GLONASS), Galileo, and BeiDou.

The accuracy of a GPS position fix is variable and is affected by factors such as the antenna positioning, how many satellites are used to determine a position and how long satellite information has been received for.

The term GPS will be used in this manual to mean all and any GNSS systems.

1.2.2 Compass safe distance

The compass safe distance of this unit is 0.2m or greater for 0.3° deviation.

1.2.3 RF emissions notice

Caution: The AIS transceiver generates and radiates radio frequency electromagnetic energy. This equipment must be installed and operated according to the instructions contained in this manual. Failure to do so can result in personal injury and / or AIS transceiver malfunction.

Caution: Never operate the AIS transceiver unless it is connected to a VHF antenna.

To maximise performance and minimise human exposure to radio frequency electromagnetic energy you must make sure that the antenna is mounted at least 1.5 metres away from the AIS transceiver and is connected to the AIS transceiver before power is applied. The system has a Maximum Permissible Exposure (MPE) radius of 1.5m. This has been determined assuming the maximum power of the AIS transceiver and using antennas with a maximum gain of 3dBi. The antenna should be mounted 3.5m above the deck in order to meet RF exposure requirements. Higher gain antennas will require a greater MPE radius. Do not operate the unit when anyone is within the MPE radius of the antenna (unless they are shielded from the antenna field by a grounded metallic barrier). The antenna should not be co-located or operated in conjunction with any other transmitting antenna. The required antenna impedance is 50 Ohms.

1.2.4 Disposal of this product and packaging

Please dispose of the AIS transceiver in accordance with the European WEEE Directive or with the applicable local regulations for disposal of electrical equipment.

Every effort has been made to ensure the packaging for this product is recyclable. Please dispose of the packaging in an environmentally friendly manner.

1.2.5 Accuracy of this manual

The AIS transceiver may be upgraded from time to time and future versions of the AIS transceiver may therefore not correspond exactly with this manual. Information contained in this manual is liable to change without notice. The manufacturer of this product disclaims any liability for consequences arising from omissions or inaccuracies in this manual and any other documentation provided with this product.

1.2.6 Radio Equipment Directive

The manufacturer of this product declares that this product is in compliance with the essential requirements and other provisions of the Radio Equipment Directive 2014/53/EU and as such displays the CE mark. The RED declaration of conformity is provided as part of this documentation pack. The declaration of conformity is provided with the product document pack.

The manufacturer declares that this product complies with the United Kingdom Conformity Assessed requirements and as such, displays the UKCA mark. The UKCA declaration of conformity is provided as part of this documentation pack.

1.2.7 FCC notice

This equipment has been tested and found to comply with the limits for a class B digital device, pursuant to part 15 of the FCC Rules. These limits are designed to provide reasonable protection against harmful interference in a residential installation. This equipment generates, uses and can radiate radio frequency energy and, if not installed and used in accordance with the instructions, may cause harmful interference to radio communications.

This device complies with part 15 of the FCC Rules. Operation is subject to the following two conditions: (1) This device may not cause harmful interference, and (2) this device must accept any interference received, including interference that may cause undesired operation.

Changes or modifications not expressly approved by the party responsible for compliance could void the user's authority to operate the equipment.

WARNING: It is a violation of the rules of the Federal Communications Commission to input an MMSI that has not been properly assigned to the end user, or to otherwise input any inaccurate data in this device.

1.2.8 Important information for US customers

US CUSTOMERS ONLY: In the USA it is illegal for an end user to configure their own AIS with their vessel data. To do so is a violation of the rules of the United States Coast Guard (USCG). This must be done by a competent installer, such as em-trak, an em-trak dealer or competent marine electronics professional. If your transceiver has not been pre-configured for you please refer to your dealer or contact support@em-trak.com for advice on how to have the transceiver configured legally. If purchasing direct from em-trak online we can configure it for you and dispatch it pre-configured at

no extra cost, if you are purchasing from one of our dealers, then they will do it for you.

In the United States of America, the MMSI and static data must only be entered by a competent installer. The end user of the equipment is not authorised to enter their own vessel data.

1.2.9 Industry Canada notice

This device complies with Industry Canada license-exempt RSS standard(s). Operation is subject to the following two conditions:

1. This device may not cause interference, and
2. This device must accept any interference, including interference that may cause undesired operation of the device.

This Class B digital apparatus complies with Canadian ICES-003.

Le présent appareil est conforme aux CNR d'Industrie Canada applicables aux appareils radio exempts de licence. L'exploitation est autorisée aux deux conditions suivantes:

1. L'appareil ne doit pas produire de brouillage, et
2. L'utilisateur de l'appareil doit accepter tout brouillage radioélectrique subi, même si le brouillage est susceptible d'en compromettre le Fonctionnement.

Cet appareil numérique de la classe B est conforme à la norme NMB-003 du Canada.

2 About your AIS transceiver

2.1 Overview

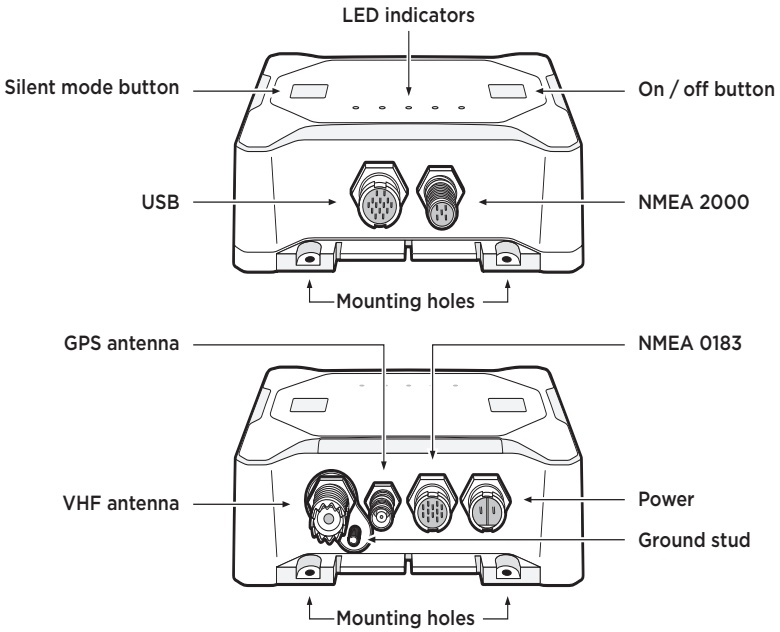

Figure 1 AIS transceiver overview

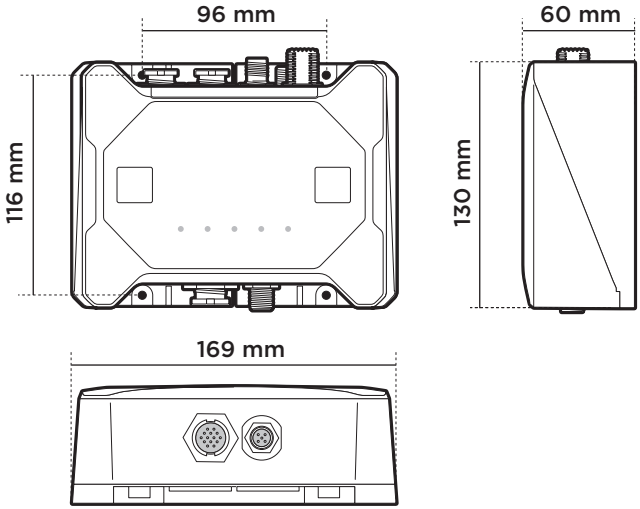

Figure 2 Transceiver dimensions

2.1.1 Main features

- Integrated WiFi & Bluetooth so you can connect wirelessly to all your devices.
- Internal battery back-up for up to 24 hours operation.
- IPx7 tested and certified for complete water submersion and IPx6 tested and certified for high pressure spray. The B200 is able to be installed and operated permanently outdoors in a fully exposed location or in a location where it will be exposed to extreme hot or cold temperatures, damp, salt air and water.
- NMEA 2000, NMEA 0183 & USB so you can connect to any chart plotter, sensor, PC or laptop application that supports AIS.

2.2 What's in the box?

Figure 3 shows the items included with your B200 purchase. If any of the items are not present please contact your dealer or support@em-trak.com.

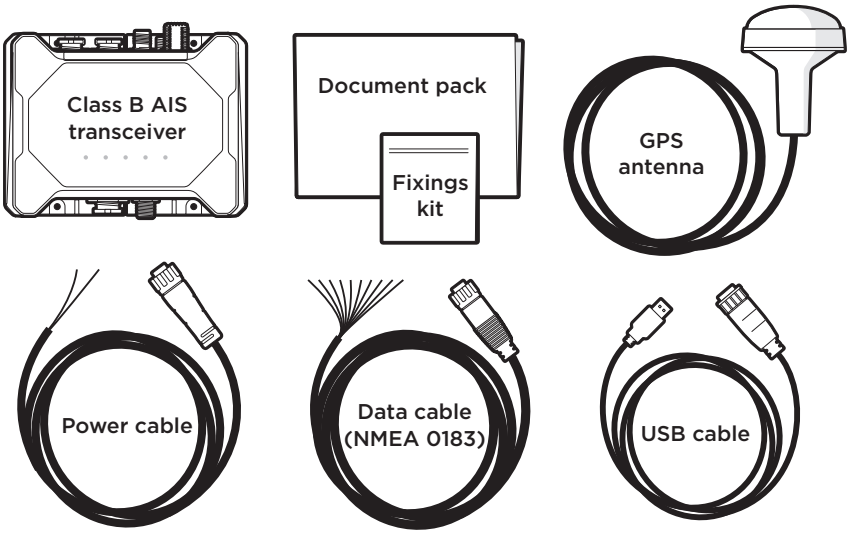

Figure 3 Items included with the product

2.3 Support and warranty

With em-trak you can buy with confidence. If you are unhappy with your new product for any reason, within two days of receipt and subject to the product and packaging being complete and undamaged, you may return it to us for a full refund. We are sorry, but we cannot accept the return of any product if you have not advised us in writing within 48 hours of receiving your em-trak product, or if it has been used and or damaged or if any of the package is incomplete. All em-trak products benefit from our three year global warranty.

In the unlikely event of a problem, please contact our Customer Support department (24/7) at support@em-trak.com and one of our experts will work with you to instantly resolve your issue or arrange the repair or replacement of your em-trak product. The warranty is invalidated if the product has been incorrectly used, damaged or tampered.

We recommend visiting www.em-trak.com/support to access the product FAQs, and to download user manuals and documentation.

2.4 Configuration tool

Your AIS transceiver will need to be configured with your vessel details before it will start transmitting and working correctly. To do that you will need to download proAIS2 to your PC or laptop from www.em-trak.com/installation.

More detail on proAIS2 and the configuration process can be found in Section 3.5.2.

3 Installation

3.1 Summary

Before beginning installation of your transceiver, please ensure you have any necessary additional items as detailed below. It is strongly recommended that you read all of the instructions in this manual prior to installation. If after reading this manual you are unsure about any element of the installation process please contact your dealer or support@em-trak.com for advice.

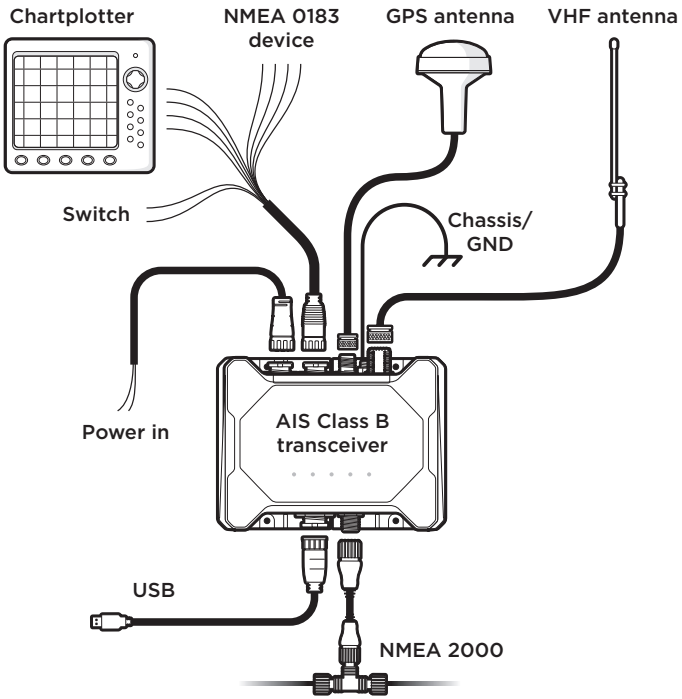

Figure 4 Typical installation configuration

In addition to the items supplied, the following may also be required for your installation:

- VHF antenna and cable - this is required for your transceiver to receive and transmit. A VHF antenna installation is covered in more detail in Section 3.2.1. If you need to extend the antenna cable when connecting to your existing VHF antenna, RG-58 or RG-8X can be used for short distances. for longer runs we would recommend a low loss cable like RG 213.
- Power cable - this may be required to extend the length of the 2m power cable that is supplied with your transceiver. If you require longer cables to reach your power supply, please ensure they are capable of carrying currents of up to 4A peak and 1.6A on average. Connecting the power supply is covered in more detail in Section 3.3.1.
- Toggle switch - this can be used to turn on/off silent mode. We would recommend a latching toggle switch for this application. Installation of the toggle switch is covered in more detail in Section 4.4. Silent mode can also be controlled using the silent mode button and proAIS2.

3.2 Antennas

3.2.1 VHF antenna

Connection to a suitable VHF antenna will be required for the transceiver to receive and transmit.

If the B200 is not connected to an antenna splitter it will require a dedicated VHF antenna tuned to 162MHz.

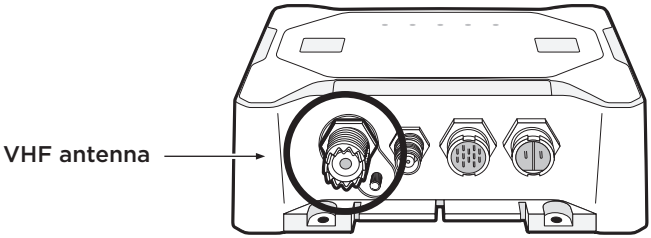

Figure 5 Position of the VHF antenna connector

The VHF antenna connector type is SO-239. It requires a PL-259 mating connector for the antenna.

For optimum performance the VHF antenna should be mounted as high as possible, and as far away as possible from metal structures, obstructions or sources of interference. If another transmitting antenna is installed on the same vessel we would recommend a separation distance of at least 3m.

3.2.2 Earthing the AIS Transceiver

An M5 ground connection point stud is provided adjacent to the VHF antenna connector. There is also an M5 nut and shake-proof washer provided in the fixing kit to allow connection to the ground connection point as indicated in Figure 6.

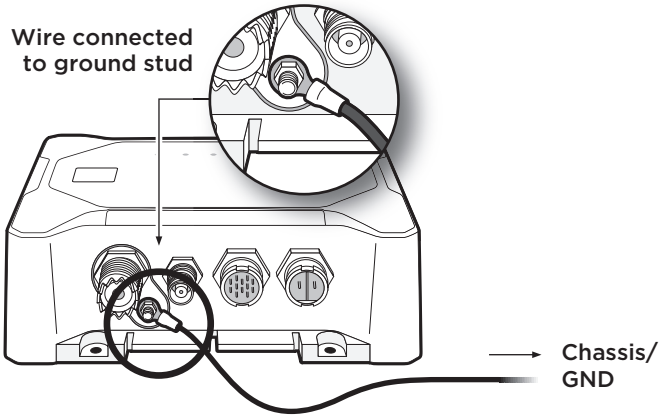

Figure 6 Grounding the AIS transceiver

This product must be connected to protective ground via the ground connection point. It is essential that the ground connection point is used in all installations, regardless of what other equipment is connected. The ground connection point must be bonded to protective ground using as short a connection as possible.

3.2.3 GPS Antenna

The B200 has a high-performance GPS receiver that is compatible with the GPS, GLONASS, Galileo, and BeiDou satellite navigation systems. GPS and Galileo systems are always used and proAIS2 can be used to select between GLONASS and BeiDou as the third system. This provides a more stable position fix, and also offers redundancy if one of the satellite systems goes offline.

Please note the following guidelines when installing the external GPS antenna.

- You will require a 1″ (inch) 14 TPI threaded mount if you choose to pole mount the GPS antenna.
- The GPS antenna is also supplied with a gasket/thumb nuts/ studs so it can be deck mounted. The gasket can be used as a mounting template if required.
- Mounting the external GPS antenna at a low point on the boat will minimise the effect of pitch and roll on your transmitted position.
- Do not mount your antenna in the direct path of a radar or any other transmitting equipment.

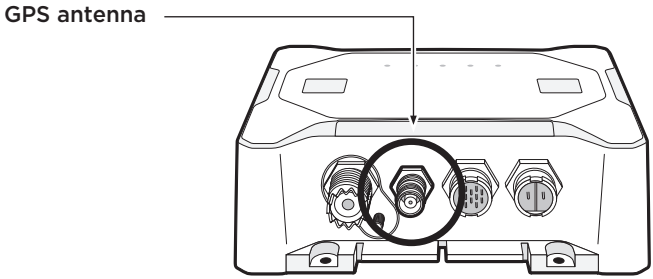

Figure 7 Position of the GPS antenna connector

3.3 Power and Data

3.3.1 Connecting the data cable

A data cable is supplied with the product to provide connections for two NMEA 0183 data ports and the optional silent mode switch. The cable has a moulded connector at one end which should be connected to the 12 pin connector on the unit. The other end of the cable has 10 colour coded bare wires ready for connection.

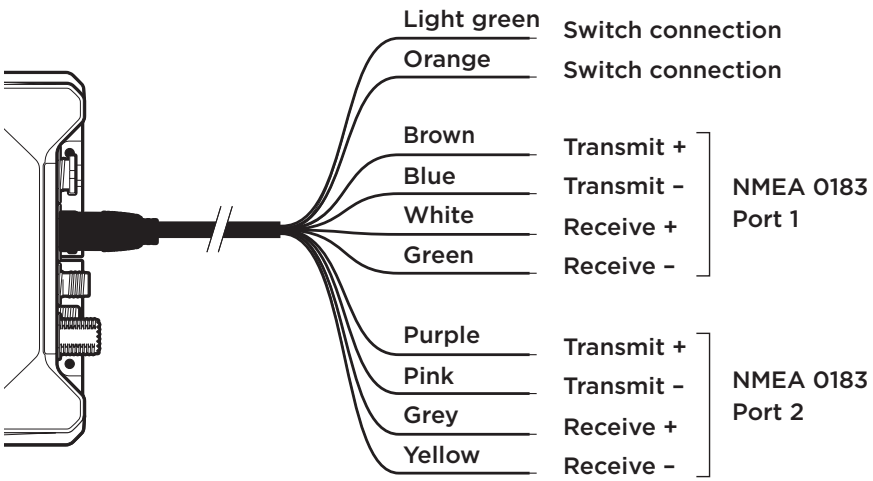

Figure 8 Power and data cable connections

The table below lists the function of each colour coded wire for reference.

Wire colour	Description	Function
Light Green	Switch connection	External switch connections for silent mode
Orange	Switch connection	
Brown	NMEA 0183 port 1 TX+	High speed NMEA 0183 output (38,400baud) intended for connection to chart plotters
Blue	NMEA 0183 port 1TX-	
White	NMEA 0183 port 1 RX+	
Green	NMEA 0183 port 1 RX-	
Purple	NMEA 0183 port 2 TX+	Low speed NMEA port (4,800baud) intended for connection to other NMEA 0183 compatible sensors for multiplexing of data to the chart plotter
Pink	NMEA 0183 port 2TX-	
Grey	NMEA 0183 port 2 RX+	
Yellow	NMEA 0183 port 2 RX-	

Table 1 Colour coding of wires in the accessory cable

Please check your wiring very carefully before applying power to the product. Failure to wire the product correctly could result in permanent damage.

3.3.2 Connecting the power cable

The AIS transceiver is designed to operate at voltages from 9.6-31.2V, however for optimum performance we would recommend maintaining the voltage range at 12-24V.

It is recommended that crimped and soldered lugs are used to connect the AIS transceiver to the power source using a suitable circuit breaker and/or 4A fuse block. The red and black wires as shown in Figure 8 need to be connected as follows:

1. Connect the red wire to a 12V or 24V power supply positive terminal.
2. Connect the black wire to the supply negative terminal.

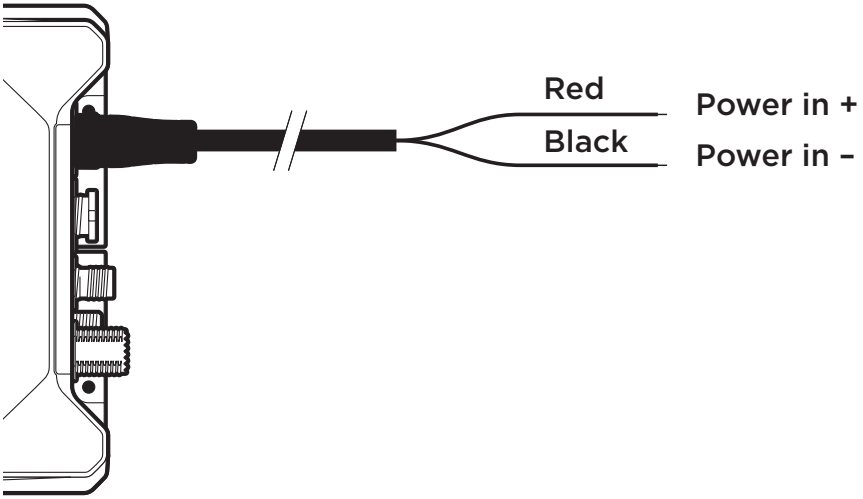

Figure 9 Connecting the power supply

3.4 Location and fixing of the transceiver

Please note the following guidelines when selecting an installation location:

- The ambient temperature around the transceiver should be maintained between -25°C and +55°C.
- The transceiver should not be located in a flammable or hazardous atmosphere, such as in an engine room or near to fuel tanks.
- The transceiver must be fitted in a location where it is at least 0.2m from a compass or any magnetic device.
- The transceiver should be mounted in a location where the LED indicators are readily visible as they provide important information on the status of the transceiver.
- WiFi & Bluetooth will benefit from the B200 being installed near the center of the boat to provide a consistent signal across all areas. The construction of your vessel can also have an impact on performance. For example, metal structural bulk heads and roofing, power cables and reflective surfaces can reduce, and in certain situations block, the signal. Consider testing the reception to ensure you're happy before you mount the transceiver.
- For optimum performance the transceiver should be mounted at least 0.5m away from other high power transmitting equipment like VHF radios.
- There should be adequate space around the transceiver for routing of cables. See Figure 10 for details of the transceiver dimensions.

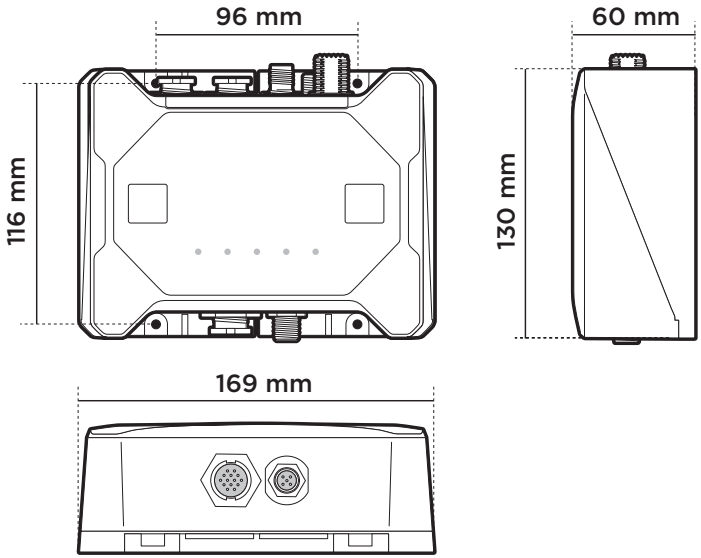

Figure 10 AIS transceiver dimensions

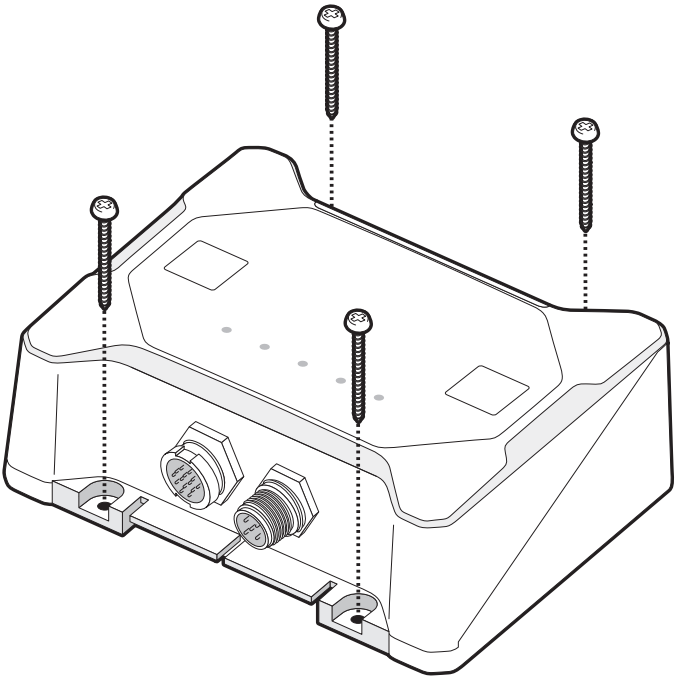

Figure 11 AIS transceiver mounting

3.5 Configuration

Your transceiver will only be able to transmit once it has been configured with appropriate vessel data.

3.5.1 Switching on your AIS transceiver for the first time

When power is applied to the transceiver for the first time all the status LED indicators will flash briefly, leaving only the amber and red LED indicators illuminated. You will now need to configure your transceiver, after which only the green LED will be illuminated.

3.5.2 Configuring your AIS transceiver

There are two ways in which your AIS transceiver can be configured.

Method 1: Configuration in advance by your dealer or installer.

If your AIS transceiver has been configured for you by your dealer or installer you can proceed to Section 3.7. This is required for customers who have a US-registered vessel.

Method 2: Configuration using your PC

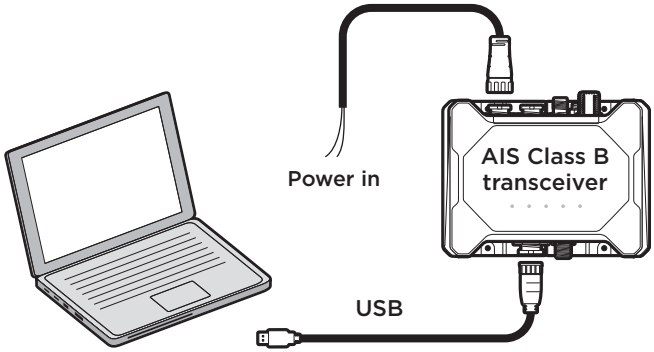

Figure 12 Configuration using your PC

3.6 Introduction to proAIS2

proAIS2 is available for download from www.em-trak.com/installation and allows you to configure your transceiver using a PC or laptop over USB.

This configuration tool can be used to configure your vessel data, check the GPS antenna performance, view details on surrounding vessels, and monitor and diagnose the performance of the transceiver. Further information on how to use proAIS2 can be found in the FAQ section for this product - https://em-trak.com/installation/

3.6.1 Installing proAIS2

1. Download and extract the zip file to your local PC or laptop. For Windows installations you will need to open the appropriate folder and run the setup.exe or proAIS2.msi files before following the on-screen prompts.
   For macOS installations you will need to open the appropriate folder and run the proAIS2.dmg file.
2. If a security warning appears, click 'Install' to continue with the installation.
3. For Windows installations, the USB drivers can be optionally installed at the same time. This is recommended for most installations and will be required to allow your PC or laptop to recognise the transceiver COM port. Once installation is complete, a start menu folder and shortcut can be created for future use.

3.6.2 Vessel data configuration using proAIS2

You will require the following information in order to configure your AIS transceiver:

- MMSI
- Vessel name
- Vessel type
- Vessel dimensions and position of your GPS antenna installation.

Please ensure that you enter all vessel data accurately. Failure to do so could result in other vessels failing to identify your vessel correctly. The vessel MMSI can only be configured once using proAIS2. If you need to change the MMSI for any reason, please contact your dealer or support@em-trak.com and provide the product serial number, current MMSI number and new MMSI number.

3.6.3 WiFi configuration using proAIS2

The WiFi interface can be configured using the WiFi tab. Sections 3.6.4 and 3.6.5 describe the operation for Access Point and Client modes.

3.6.4 Access point mode

This mode enables your transceiver to create its own network. The following parameters can be configured:

- AP SSID (the default is <B200>_<alphanumeric number>)
- IP address (the default is 192.168.2.1)
- Password (the default is emtrakais)
- Port (the default is 5000)

Access point mode supports data streaming to two clients simultaneously.

3.6.5 Station mode

This mode enables your transceiver to connect to an existing network as a client. The following parameters can be configured:

- Host name
- SSID
- Password
- DHCP / Fixed IP address, Subnet, Gateway
- Port number
- Protocol
- Encryption on/off

3.6.6 Bluetooth

The Bluetooth interface uses the same ID as the default Wi-Fi AP SSID. There is no control or configuration for the Bluetooth interface, and it is not supported by Apple devices.

For security purposes there is a 5 minute window from initialisation where the Bluetooth interface is available for pairing. After this window expires it will disappear from device lists. Active connections will not be affected by this. If you wish to make the Bluetooth interface visible again for a further 5 minutes press the on/off button to enter standby mode then exit standby mode by pressing the on/off button again.

The Bluetooth interface supports data streaming to seven devices simultaneously.

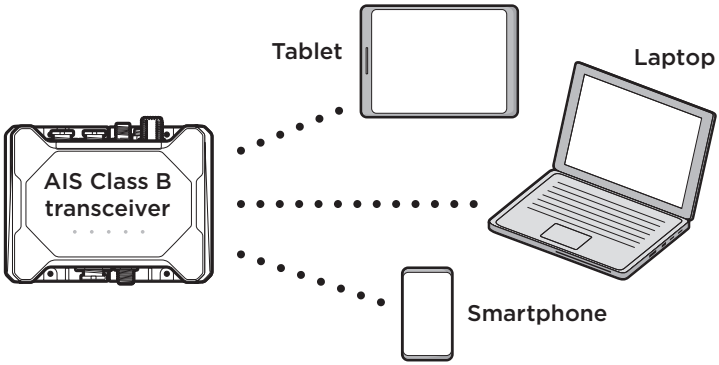

Figure 13 Typical mobile devices for WiFi & Bluetooth connection

3.7 Connectivity

3.7.1 Connecting to an NMEA 2000 network

The transceiver can be connected to an existing NMEA 2000 network to provide AIS and position data to other connected devices such as chartplotters, instruments, sensors, etc.

Connection is made by a Micro-C drop cable to the existing NMEA 2000 network T-piece. This item is not supplied so you will need to purchase one from your local dealer.

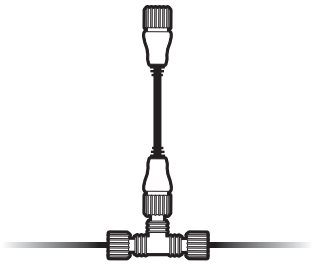

Figure 14 NMEA 2000 network connection

Please note that the transceiver cannot be powered by the NMEA 2000 network, it will also require external power using the supplied power cable.

Starter kits are available to purchase if you do not already have an NMEA 2000 network.

The list of supported NMEA 2000 data (PGN's) is detailed in Section 4.5.

3.7.2 Connecting to your chartplotter

NMEA 0183 port 1 is recommended for connecting to a chartplotter, operating at 38,400 baud by default. This can be changed using

proAIS2 if required. Four wires are provided for a bi-directional connection, and are colour coded as shown in Figure 15.

Other manufacturers may use different signal names, however the following general guidelines will apply when connecting to other equipment:

- positive signals should be connected together
- negative signals should be connected together
- transmit signals should be connected to receive signals and vice versa.

Please refer to your equipment manual for more information.

Both NMEA 0183 ports support multiplexing, which means that any data received on port 1 will be automatically output on port 2, and vice versa.

This can be useful when connecting to a chartplotter that only has a single NMEA 0183 port, so a sensor can be connected to port 2 on the transceiver, and the combined sensor and AIS data will be output on port 1.

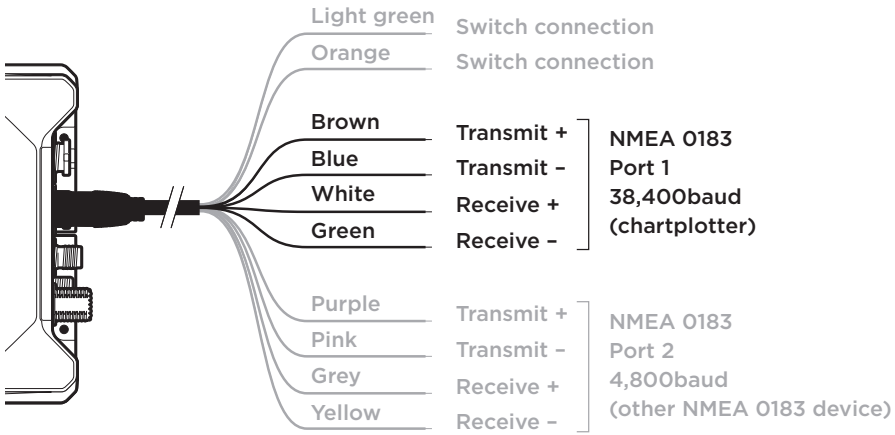

Figure 15 Connecting to your chartplotter

3.7.3 Connecting to your NMEA 0183 sensor

NMEA 0183 port 2 is recommended for connecting to your sensor or NMEA 0183 compatible equipment, operating at 4,800 baud by default. This can be changed using proAIS2 if required. Four wires are provided for a bi-directional connection, and are colour coded as shown in Figure 16.

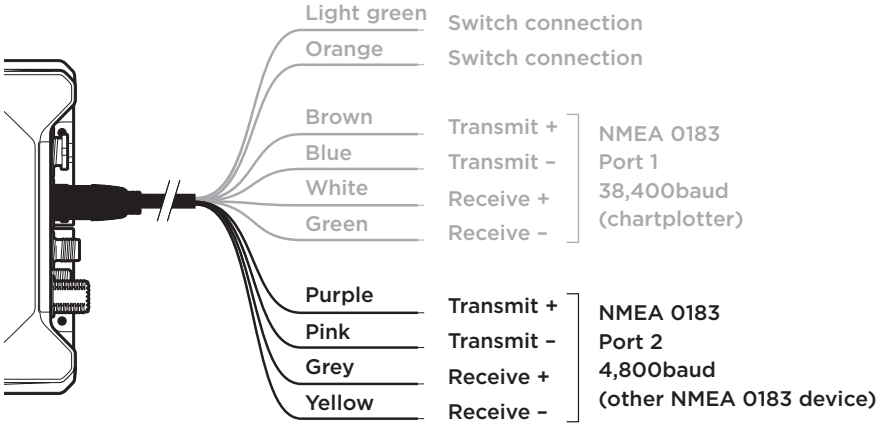

Figure 16 Connecting to your NMEA 0183 sensor

3.7.4 Connecting to your PC

USB drivers will need to be installed for Windows operating systems (Windows 7 and up). These are installed automatically by using either Windows Update or when installing proAIS2. proAIS2 is available for download from www.em-trak.com/installation.

USB drivers are typically not required for macOS operating systems.

Once your transceiver is communicating with your PC or laptop you can view the received AIS data using a compatible navigation application.

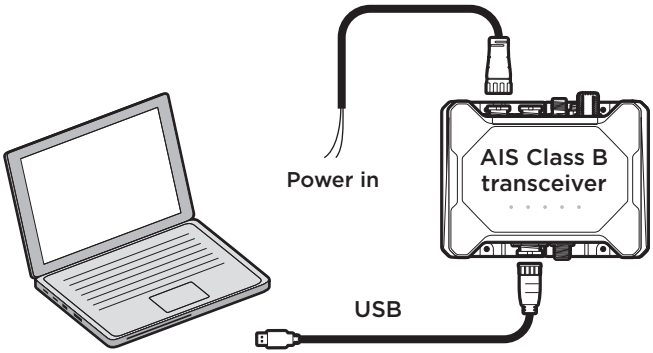

Figure 17 Connecting to your PC

3.7.5 WiFi & Bluetooth connectivity

To establish a connection with a mobile device you will need to select your transceiver from its list of detected devices using the device name or SSID - at default it appears as <B200>_<alphanumeric number> but it can be changed using the WiFi tab on proAIS2 if required.

To stream AIS data to a navigation application you may then need to enter the IP address and port number. This is also displayed in the WiFi tab of proAIS2 and can be changed if required.

Please contact support@em-trak.com if you require any assistance with the wireless configuration of your transceiver.

4 Operation

4.1 Operating modes

The B200 has 3 modes of operation and a standby mode. When external power is present, the transceiver is in Normal mode. When external power is removed, the B200 enters one of two modes, Normal Back-up or Emergency Back-up, depending on how the transceiver has been configured using proAIS2.

4.1.1 Normal mode

The transceiver transmits and receives normally.

4.1.2 Normal back-up mode

In Normal back-up mode the B200 will continue to operate as a standard AIS Class B SOTDMA device as if external power were present until battery power is exhausted. The battery back-up will last approximately 12 hours.

4.1.3 Emergency back-up mode

In Emergency Back-up mode, the B200 maximises the battery life to 24 hours by:

- decreasing the AIS transmission rate to every 10 minutes (messages will be transmitted using the CSTDMA access scheme).
- disabling all other functionality up to 30 seconds before a transmission

4.1.4 Standby mode

In standby mode the transceiver stops transmitting, receiving and communicating with other equipment.

4.2 LED indicators

4.2.1 Using the AIS transceiver

Once the unit has been configured it is ready for use. Providing other vessels installed with transceivers are within radio range of your vessel you will see their details appear on the display devices that you have connected to your transceiver. Please note that your full vessel details may not be visible to other vessels immediately as static data messages (containing vessel name, call sign, etc) are required to be transmitted every 6 minutes.

4.2.2 LED indicator functions

The AIS transceiver includes five coloured LED indicators as shown in Figure 18. The state of the LED indicators provide information regarding the status of the AIS transceiver.

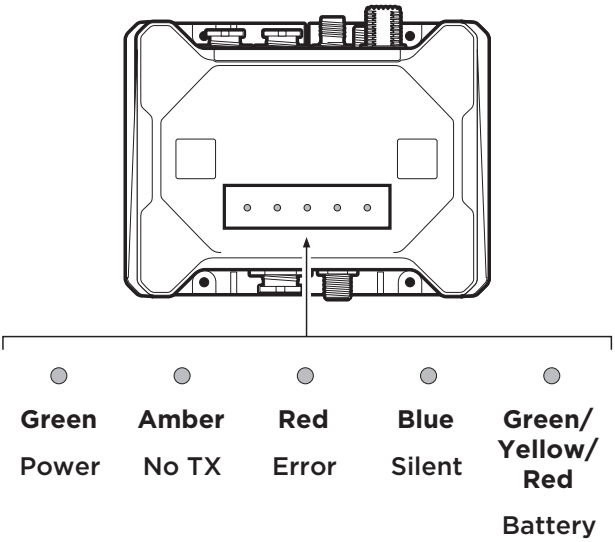

Figure 18 LED indicator location on the AIS transceiver unit

The meaning of each LED indicator is shown in the table below. Figure 18 shows the LED indicator positions on the AIS transceiver.

LED	Function
	Green LED indicator Indicates that the B200 is configured and powered up by an external power source. A flashing LED indicates the B200 is in standby mode.
	Red LED indicator Indicates that the B200 has detected a system error. The likely causes of this are detailed in the troubleshooting guide in Section . Alarms displayed in the Diagnostic tab of proAIS2 will also assist with troubleshooting.
	Blue LED indicator Indicates that silent mode is enabled. Silent mode is a feature that ceases the transmissions from your own vessel, whilst the reception of other vessel position reports continue. You can activate this using the proAIS2, the silent mode button or by using a toggle switch as detailed in Section 4.4.
	Amber LED indicator Indicates that the B200 is not transmitting. This can be for a number of reasons: •The AIS radio channels are exceptionally busy so there are currently no available slots for transmission. •The unit has been in silent mode and after deactivating silent mode this amber LED indicator will illuminate until the first AIS message has been sent •The B200 has been commanded by the local authority (via an AIS base station) to cease transmissions.

	Multicolour LED indicator Indicates the B200 is operating from the internal battery. The colour of the LED indicator provides information on the charge state of the battery: green - good charge level; yellow - moderate charge level; red - low charge level. Flashes along with the Green indicator when the B200 is in standby mode and powered by the internal battery. Flashes when the B200 is in Emergency Back-up mode.

Table 2 LED indicator functions

4.3 Buttons

4.3.1 Silent mode button

The silent mode button enables / disables 'silent mode'. In silent mode the transmission of your own vessel position ceases, whilst the reception of other vessel's AIS position continues. When silent mode is active the blue LED indicator will be illuminated. This is also reflected in the Diagnostics tab of proAIS2.

4.3.2 On / off button

The on / off button allows the B200 to be put into standby mode or switched off completely. In standby mode the B200 stops transmitting, receiving and communicating with other equipment.

To enter standby mode, press the on / off button.

Press the on / off button again to exit standby mode and restart the transceiver. Standby mode is not available when in Emergency Back-up mode.

When external power is removed, the B200 continues to operate in the selected back-up mode. Press and hold the back-up power button for 3 seconds to turn off the transceiver.

The B200 will turn on and return to normal operation when external power returns.

4.4 Silent mode

An external switch enables / disables ‘silent mode'. In silent mode the transmission of your own vessel position ceases, whilst the reception of other vessel's AIS position continues. When silent mode is active the blue LED indicator will be illuminated. This is also reflected in the Diagnostics tab of proAIS2.

Silent mode is not available in Emergency Back-up mode.

When silent mode is active other vessels will not be able to receive your vessel information on their AIS devices. Your navigational safety may be compromised as a result.

Connect the toggle switch between the light green and orange wires as shown in Figure 19. This is optional and not essential for normal operation of the product.

Do not connect a voltage source across the switch inputs as this may damage the transceiver.

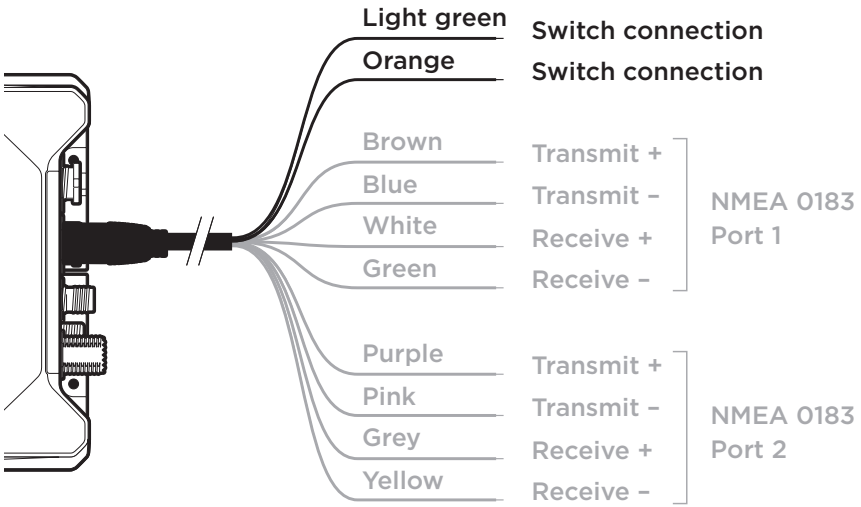

Figure 19 Connecting an external switch

4.5 PGN table

PGN's are useful for understanding the detailed information that your transceiver receives and transmits on an NMEA 2000 network. The PGN's listed in Table 3 are supported by the transceiver. There are no unused fields.

PGN No.	Title in NMEA database	Usage	NMEA 0183
059392	ISO Acknowledgment	in, out	
059904	ISO Request	in, out	
060416	ISO Transport Protocol - Data	in, out	
060160	ISO Transport Protocol - Connection	in, out	
060928	ISO Address Claim	in, out	
065240	ISO Command Address	in	
126208	Group Function	in, out	
126464	PGN list - Group Function	in, out	
126992	System time	out	
126993	Heartbeat	out	
126996	Product Information	in, out	
126998	Configuration Information	out	
127250	Vessel Heading	in	HDT/THS
127251	Rate of Turn	in	ROT
129025	Position, Rapid Update	out	RMC
129026	COG & SOG. Rapid Update	out	RMC

129029	GNSS Position data	out	RMC
129038	AIS Class A Position Report	out	VDM/VDO
129039	AIS Class B Position Report	out	VDM/VDO
129040	AIS Class B Extended Position Report	out	VDM/VDO
129041	AIS AtoN Report	out	VDM/VDO
129793	AIS UTC and Date Report	out	VDM/VDO
129794	AIS Class A Static and Voyage Related Data	out	VDM/VDO
129795	AIS Addressed Binary Message	out	VDM/VDO
129796	AIS Acknowledge	out	VDM/VDO
129797	AIS Binary Broadcast Message	out	VDM/VDO
129798	AIS SAR Aircraft Position Report	out	VDM/VDO
129801	AIS Addressed SRM	out	VDM/VDO
129802	AIS Safety Broadcast Binary Message	out	VDM/VDO
129809	AIS Class B CS Static Data Report Part A	out	VDM/VDO
129810	AIS Class B CS Static Data Report Part B	out	VDM/VDO

Table 3 NMEA 2000 PGN List

5 Troubleshooting

Issue	Possible cause and remedy
No LED indicators are illuminated	• Check that the power supply is connected correctly. • Check that the power supply is a 12V or 24V supply.
The red error LED indicator is flashing	There may be a problem with the VHF antenna system. This can be confirmed using proAIS2. If the 'High VSWR' alarm is active please check for the following: • Faulty VHF antenna/cable/connectors • Poor connection at the VHF antenna/ cable/connectors • Suitability of the VHF antenna. An antenna optimised for AIS at 162MHz is recommended if an antenna splitter isn't connected • VHF antenna location (ensure that is isn't mounted near other transmitting antennas or sources of interference, metal structures, or other obstructions)
The red 'error' LED indicator is illuminated	• Check that the unit is configured with a valid MMSI number. This can be confirmed using the Configuration tab in proAIS2 • Check that the GPS antenna has a stable position fix. This can be confirmed using the GPS Status tab in proAIS2 • Check that the power supply is within 9.6 - 31.2V. This can be confirmed using the Diagnostics tab of proAIS2

The amber LED indicator is flashing continuously	• Your transceiver is unable to get a GPS fix. You can check the performance of the GPS antenna by using the GPS Status tab of proAIS2.
No data is being received by the chart plotter	• Check that the signal wires are connected correctly. • Check that the baud rate matches both the transceiver and the chart plotter. • Confirm that other vessels are within radio range and that they are displayed on the Other Vessels tab of proAIS2.
My vessel name isn't being received by other vessels	• Static data (containing vessel name, call sign, etc) is transmitted every 6 minutes so it may take a few transmissions before all the vessel data is displayed. • Position reports contain critical data like position, MMSI number, vessel speed, etc and these are transmitted more regularly.
I can't establish a connection using WiFi or Bluetooth	• Check that the 5 minute Bluetooth pairing window hasn't expired. If it has, you will need to press the on/off button to enter standby mode then exit standby mode by pressing the on/off button again. • Check the configuration parameters using proAIS2 • Check that there are no obstructions between the transceiver and mobile device • Check that there are no sources of interference nearby

Table 4 Troubleshooting

If the guidance given above does not rectify the problem you are experiencing, please contact your dealer or support@em-trak.com for further assistance.

6 Specifications

Parameter	Value
Dimensions	171 x 128 x 60 mm (L x W x H)
Weight	685g
Input voltage	DC 12 - 24V (9.6 - 31.2V maximum)
Average power consumption	Normal operation: 240mA / 2.9W at 12VDC Charging batteries: 1.6A / 19.2W at 12VDC
Peak current rating	4A
GPS Receiver (AIS integrated)	50 channel IEC 61108-1 compliant
Electrical Interfaces	NMEA 0183 4,800 baud
	NMEA 2000 LEN=1
	WiFi 2.4GHz IEEE 802.11 a/b/g/n Output power +15dBm
	Bluetooth V4.0 / Output power +11dBm
Connectors	VHF antenna connector (SO-239)
	GPS antenna connector (TNC)
	NMEA 2000 connector (Micro-C)
	Power connector (2 way)
	NMEA 0183/silent mode switch (12 way)
	USB connector (14 way)

VHF Transceiver	Transmitter x 1
	Receiver x 2 (Receivers time shared between AIS and DSC)
	Frequency: 156.025 to 162.025 MHz in 25 kHz steps
Output Power	37dBm ± 1.5 dB
Channel Bandwidth	25kHz
Channel Step	25kHz
Modulation Modes	25kHz GMSK (AIS, TX and RX)
	25kHz AFSK (DSC, RX only)
Bit rate	9600 b/s ± 50 ppm (GMSK)
	1200 b/s ± 30 ppm (FSK)
Receiver Performance	Sensitivity better than -107dBm at 20% PER
	Co-channel 10dB
	Adjacent channel 70dB
	IMD 65dB
	Blocking 86dB
Environmental	Weather and waterproof to IPx7 & IPx6
	Operating temperature: -25ºC to +55ºC
	Tested to IEC 60945 'Exposed' category
LED indicators	Power, TX status, error, silent mode status, battery status.

Table 5 Specifications

7 About AIS

The marine Automatic Identification System (AIS) is a location and vessel information reporting system. It allows vessels equipped with AIS to automatically and dynamically share and regularly update their position, speed, course and other information such as vessel identity with similarly equipped vessels. Position is derived from the Global Navigation Satellite System (GNSS) and communication between vessels is by Very High Frequency (VHF) digital transmissions.

There are a number of types of AIS device as follows:

- Class A transceivers. These are similar to class B transceivers, but are designed to be fitted to large vessels such as cargo ships and large passenger vessels. Class A transceivers transmit at a higher VHF signal power than class B transceivers and therefore can be received by more distant vessels. They also transmit Class A transceivers are mandatory on all vessels over 300 gross tonnes on international voyages and certain types of passenger vessels under SOLAS regulations.
- Class B transceivers. Similar to class A transceivers in many ways, but are normally lower cost due to the less stringent performance requirements. Class B transceivers transmit at a lower power and at a lower reporting rate than class A transceivers.
- AIS base stations. AIS base stations are used by Vessel Traffic Systems to monitor and control the transmissions of transceivers.
- Aids to Navigation (AtoN) transceivers. AtoN's are transceivers mounted on buoys or other hazards to shipping which transmit details of their location to the surrounding vessels.
- AIS receivers. AIS receivers will generally receive transmissions from class A transceivers, class B transceivers,

AtoN's and AIS base stations but do not transmit any information about the vessel on which they are installed.

7.1 Static and dynamic vessel data

There are two categories of information transmitted by a transceiver: static and dynamic data.

The vessel's dynamic data, which includes location, speed over ground (SOG) and course over ground (COG), is calculated automatically using the integrated GPS receiver.

Static data is information about the vessel which must be configured into the AIS transceiver. This includes:

- Maritime Mobile Service Identity (MMSI)
- Vessel name
- Vessel call sign (if available)
- Vessel type
- Vessel dimensions

In most countries the operation of a transceiver is included under the vessel's marine VHF license provisions. The vessel on to which the AIS unit is to be installed must therefore possess a current VHF radiotelephone license which lists the AIS system, vessel Call Sign and MMSI number.

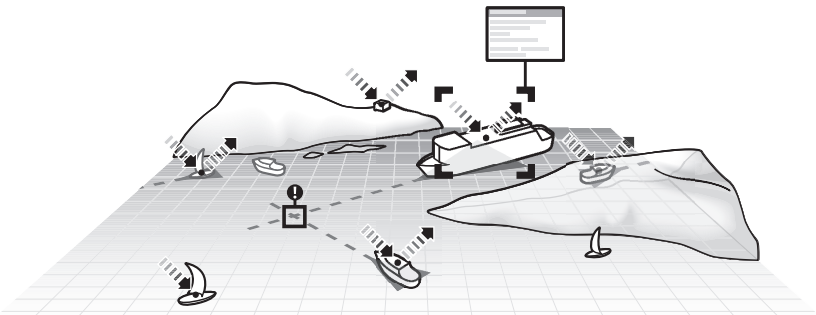

Figure 20 The AIS network

8 List of abbreviations

AIS	Automatic Identification System
AP	Access Point (Relating to WiFi behaviour)
AtoN	AIS Aid to Navigation
CE	European Declaration of Conformity
COG	Course Over Ground
COM	Common (electrical)
CS	Carrier Sense
DC	Direct Current
DHCP	Dynamic Host Configuration Protocol
DSC	Digital Selective Calling
FCC	Federal Communications Committee
GLL	Geographic position - Latitude/longitude message
GLONASS	Globalnaya Navigazionnaya Sputnikovaya Sistema (Russian GPS)
GNSS	Global Navigation Satellite System
GPS	Global Positioning System
HDT	Heading true message
IEC	International Electrotechnical Commission
IPx6	Ingress Protection (to powerful water jets)
IPx7	Ingress Protection (1m immersion for 30 minutes)
ISO	International Standards Organisation
LED	Liquid Emitting Diode
MMSI	Maritime Mobile Service Identity
NMEA	National Marine Electronics Association

PGN	Parameter Group Number
RED	Radio Equipment Directive
RF	Radio Frequency
RMC	Recommended minimum specific GPS data message
ROT	Rate of Turn
RX	Receive
SO	Self Organised
SOG	Speed Over Ground
SOLAS	Safety of Life at Sea
SRM	Safety Related Message
TDMA	Time Division Multiple Access
THS	True heading and status message
TNC	Threaded Neill–Concelman (a type of connector)
TPI	Threads per Inch
TX	Transmit
UTC	Co-ordinated Universal Time
VDM	All VDL AIS messages received
VDO	AIS own-ship broadcast data
VHF	Very High Frequency
VSWR	Voltage Standing Wave Ratio
WEEE	Waste Electrical & Electronic Equipment
WiFi	Wireless networking technology

The em-trak B200 transceiver is an aid to navigation and must not be relied upon to provide accurate navigation information. AIS is not a replacement for vigilant human lookouts and other navigation aids such as RADAR. The performanceof the B200 may be seriously impaired if not installed as instructed in the user manual, or due to other factors such as weather and or nearby transmitting devices. Compatibility with other systems may vary and is reliant on the third party systems recognising the standard outputs from the B200 transciever. em-trak reserves the right to update and change these specifications at any time without notice.

Head office:
em-trak Marine Electronics Ltd
Wireless House
Westfield Indistrial Estate
Midsomer Norton
Bath, BA3 4BS
United Kingdom
T +44 (0)1761 409559 | F +44 (0)1761 410093
enquiries@em-trak.com

Regional Office:
em-trak Marine Electronics Limited
470 Atlantic Avenue
4th floor,
Boston MA 02210
USA

T +1 617 273 8395 | F +1 617 273 8001
enquiries@em-trak.com

Support: support@em-trak.com | Sales: enquires@em-trak.com | Website: www.em-trak.com

201-1036:2